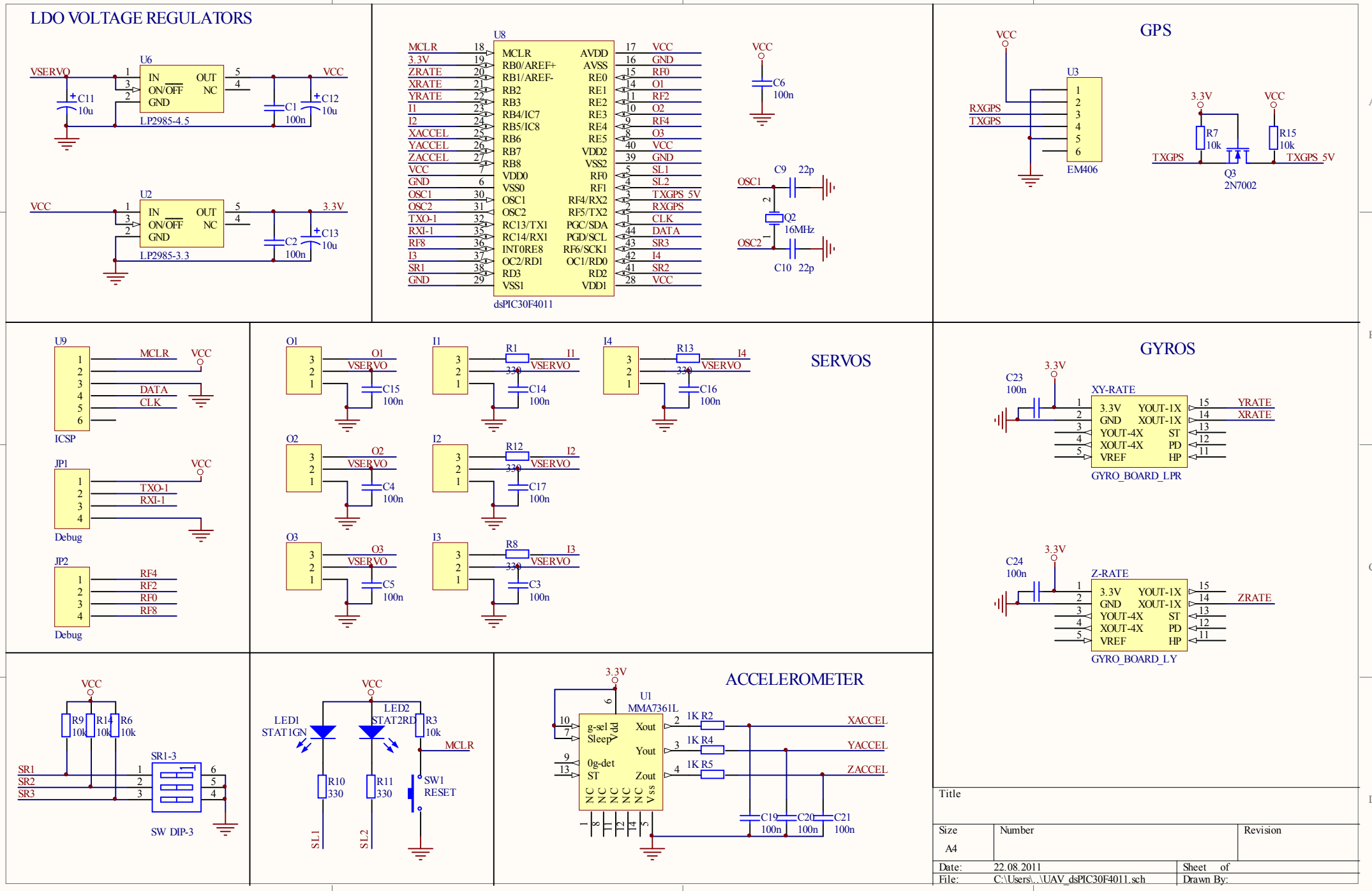
LDO VOLTAGE REGULATORS
U6
VSERVO
VCC
IN
ON/OFF
GND
OUT
NC
C11
10u
C1
100n
C12
10u
LP2985-4.5
U2
VCC
3.3V
C13
10u
C2
100n
LP2985-3.3
U8
MCLR
3.3V
ZRATE
XRATE
YRATE
I1
I2
XACCEL
YACCEL
ZACCEL
VCC
GND
OSC1
OSC2
TXO-1
RXI-1
RF8
I3
SR1
GND
AVDD
AVSS
RE0
RE1
RE2
RE3
RE4
RE5
VDD2
VSS2
RF0
RF1
RF4/RX2
RF5/TX2
PGC/SDA
PGD/SCL
RF6/SCK1
OC1/RD0
RD2
VDD1
O1
O2
I4
SR3
DATA
CLK
TXGPS_5V
RXGPS
SL1
SL2
dsPIC30F4011
C6
100n
C9 22p
Q2
16MHz
C10 22p
GPS
RXGPS
TXGPS
EM406
R7
10k
R15
10k
Q3
2N7002
TXGPS_5V
U9
ICSP
JP1
Debug
JP2
TXO-1
RXI-1
RF4
RF2
RF0
RF8
SERVOS
R1
R13
R12
R8
330
C15
100n
C14
100n
C16
100n
C4
100n
C17
100n
C5
100n
C3
100n
GYROS
C23
100n
XY-RATE
YOUT-1X
XOUT-1X
YOUT-4X
XOUT-4X
ST
PD
HP
VREF
GYRO_BOARD_LPR
C24
100n
Z-RATE
GYRO_BOARD_LY
R9
10k
R14
10k
R6
10k
SR1-3
SW DIP-3
LED1
STAT1GN
LED2
STAT2RD
R3
10k
R10
330
R11
330
SW1
RESET
ACCELEROMETER
U1
MMA7361L
g-sel
Sleep
0g-det
ST
Xout
Yout
Zout
Vdd
Vss
1K R2
1K R4
1K R5
XACCEL
YACCEL
ZACCEL
C19
100n
C20
100n
C21
100n
Title
Size
A4
Number
Revision
Date: 22.08.2011
Sheet of
File: C:\Users\...\UAV_dsPIC30F4011.sch
Drawn By:

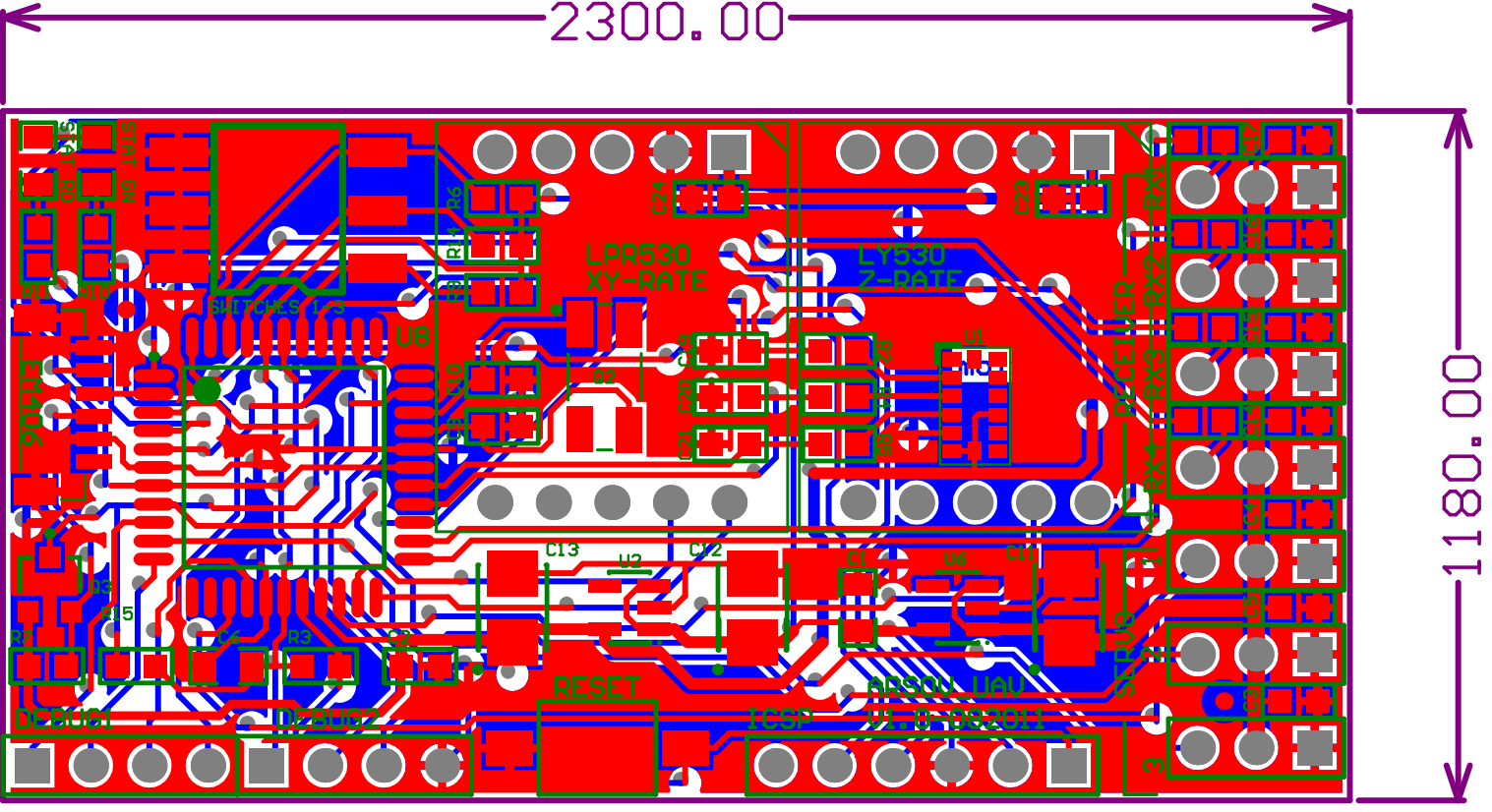
2300.00
1180.00
LPR530
XY-RATE
LY530
Z-RATE
ACCELEROMETER
RX4 RX3 RX2 RX1
RX4 RX3 RX2 RX1
BATTERIES
U8
U1
U2
U6
C13
C12
C11
C24
C23
C20
C21
C22
C19
C18
C17
C16
C15
C14
R15
R3
R2
R1
R4
R5
R6
R7
R8
R9
R10
R11
R12
R13
R14
RESET
ICSP
ARDUINO
V1.0 - 08.2011
DC3V01
DC3V02
ENTRO6
PLUG
C3
C4
C5
C6
C7
C8
C9
C10